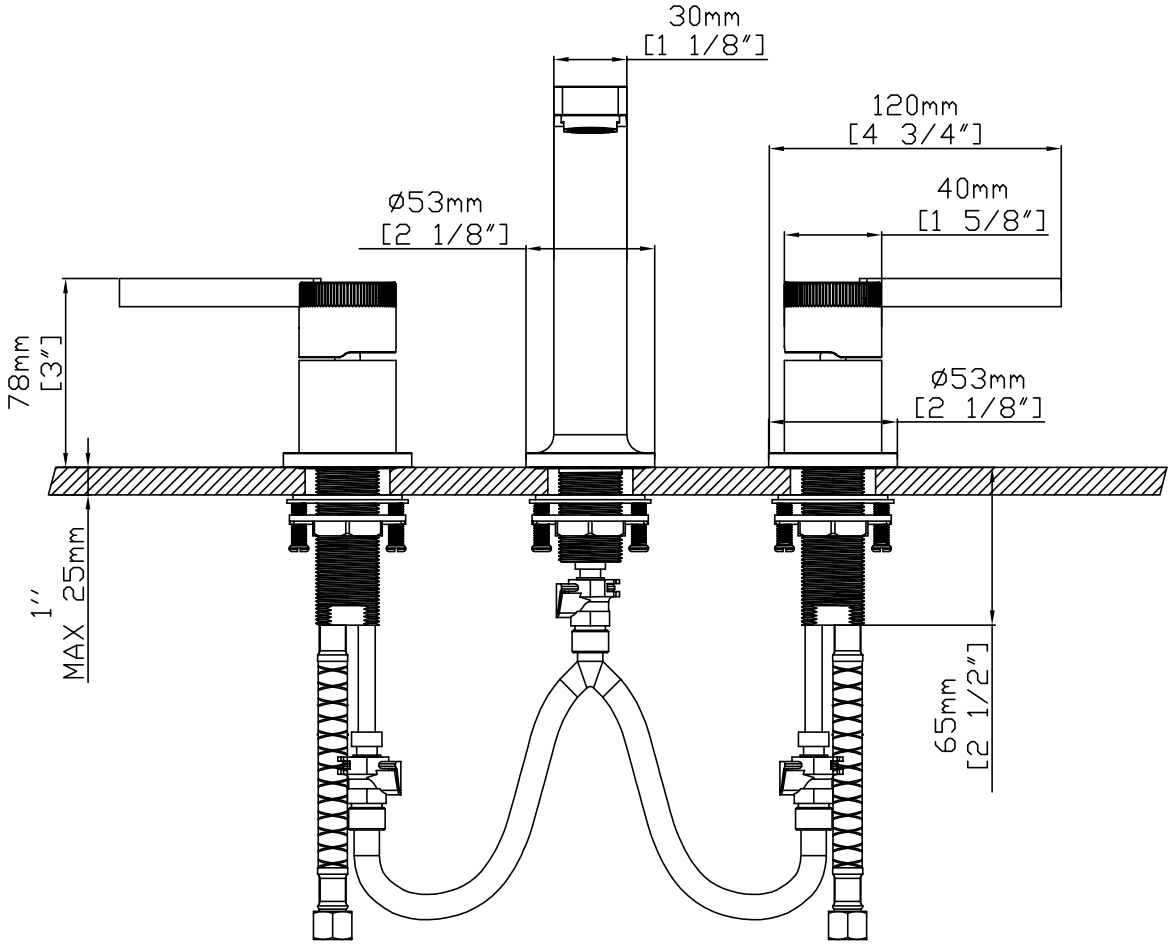
30mm
[1 1/8"]
120mm
[4 3/4"]
40mm
[1 5/8"]
ø53mm
[2 1/8"]
ø53mm
[2 1/8"]
78mm
[3"]
1''
MAX 25mm
65mm
[2 1/2"]

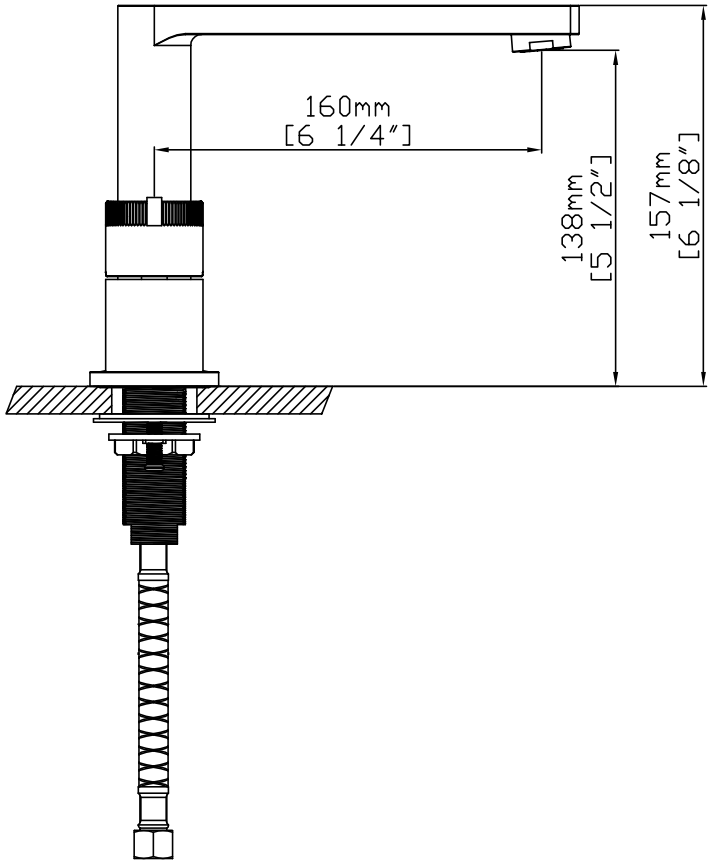
160mm
[6 1/4"]
138mm
[5 1/2"]
157mm
[6 1/8"]